YEAR 9

2013

Name: ..... **Maths Class:** .....

SYDNEY TECHNICAL HIGH SCHOOL

(Est. 1911)

Year 9 Yearly Part 1

Mathematics

Examination

Part A

Non Calculator

Time allowed: 30 mins

Instructions:

- Write your name and class at the top of this page.
- These questions must be answered in the space provided
- Attempt all questions.
- Calculators may **NOT** be used

1.	Simplify $3x + \frac{5x}{2}$.	
2.	Write the next line in this pattern: $14 \times 9 + 114 = 240$ $13 \times 9 + 103 = 220$ $12 \times 9 + 92 = 200$	.....
3.	Add $0.\dot{6}$ to $\frac{4}{5}$	
4.	Write 78 500 000 in Standard Notation (Scientific Notation).	
5.	Decrease x by 23%	
6.	Write $\frac{5}{11}$ as a recurring decimal.	
7.	There were 240 cars in the Tech staff carpark last Wednesday. The ratio of cars to bikes in the carpark on Wednesday was 12: 5. How many bikes were in the carpark?	
8.	What must be added to a – b to give b?	
9.	If $\left(\frac{9}{4}\right)^x = \frac{2}{3}$ find the value of x.	

Questions 10 and 11 refer to the diagram below where matchsticks have been used to make the first 3 steps in a pattern.

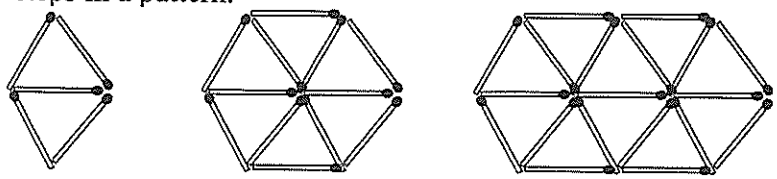

Step 1 5 matches | *Step 2* 12 matches | *Step 3* 19 matches

10. How many matches would be needed to make step 6 of the pattern?

11. Write a formula for **N**, the number of matches that would be needed to make step ***s*** of the pattern.

12. Expand and simplify the expression
$4a^2 - 2a(3b - 2a) + ab$

13. Find the value of x, if $2x - 5 = \frac{x}{2} + 10$.

14. Draw the graph of the line $y = 3x - 4$ on the number plane provided.

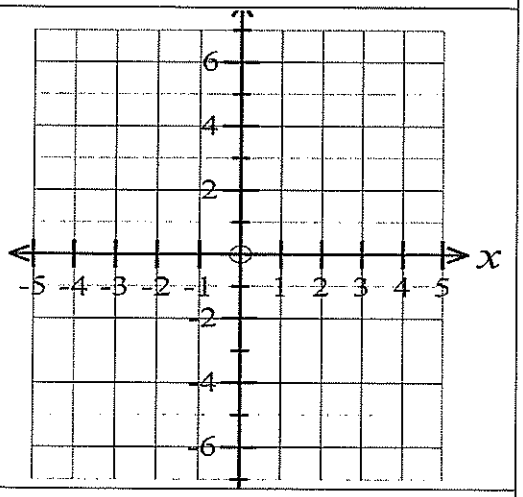

15. Simplify $\frac{4x^4 \times 3x^7}{6x^2}$.

16.	What is the gradient of the line joining the points A(-2, 8) and B(1, 2) on the number plane? 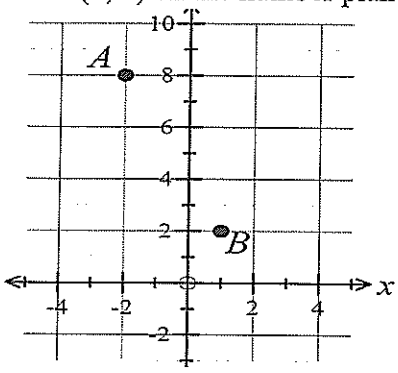	
17.	If $p = 3$ and $q = -8$, then find value of $\frac{1}{q} + \frac{1}{q-p}$.	
18.	The value of $2sin60^o = ?$	
19.	If I climb 100 metres up a tall tower, an object on the ground has an angle of depression of 45°. What is the horizontal distance to the object?	
20.	The value $sinx = \frac{3}{5}$ then the value of $tanx$ is:	
21.	A train is scheduled to leave Gosnels at 3:20 pm. It normally takes 2 hours and 45 minutes to get to Glenelg. Last Tuesday it was a quarter of an hour late leaving Gosnels and the trip to Glenelg took 12 minutes longer than normal due to track-work. What time did it arrive at Gosnels last Tuesday?	

22.

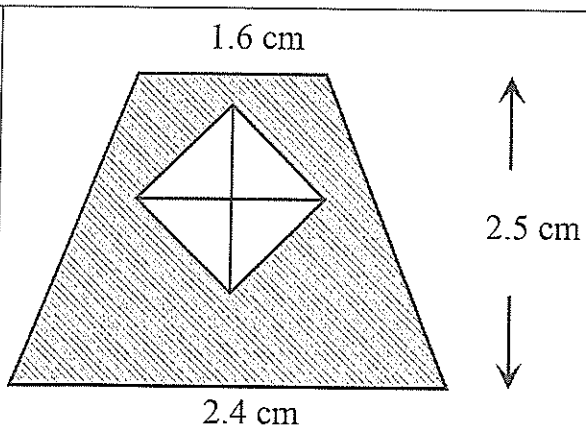

A wall in a restaurant is in the shape of a trapezium with a square window cut into it as shown.
The diagonals of the square window measure 1 metre.
The wall is to be painted. What is the area that requires painting?

.....

.....

.....

23. Find the surface area of the triangular prism shown below.

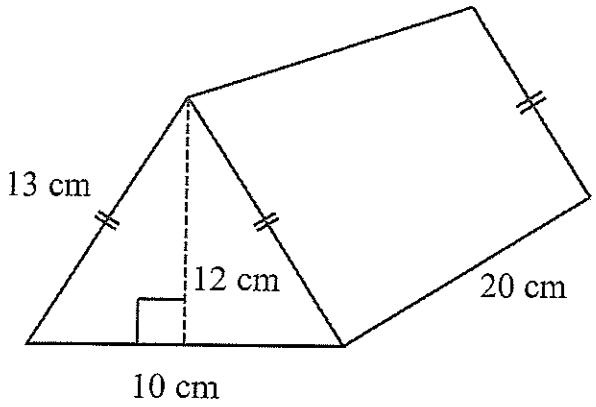

.....

.....

.....

.....

24. If $\sqrt{x+1} = 3$, then what is the value of $(x+1)^2$?

25.

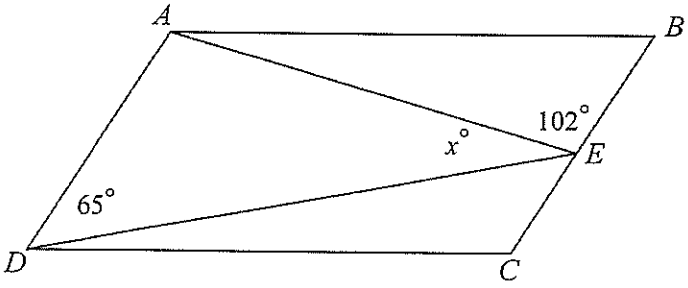

ABCD is a parallelogram. E is a point on the side BC of the parallelogram.
$\angle AEB = 102^\circ$ and $\angle EDA = 65^\circ$.
Find the value of x without reasons.

.....

END OF PART A

Name: ..... Maths Class: .....

SYDNEY TECHNICAL HIGH SCHOOL

(Est. 1911)

Year 9 Yearly Part 1

Mathematics

Examination
Part B

Calculator

Time allowed: 40 mins

Instructions:

- Write your name and class at the top of this page.
- These questions must be answered on sheet provided
- Attempt all questions.
- Calculators may be used

Multiple Choice: 35 Questions **(1 mark each)**

1. 530 501 to 3 significant figures is

a) 530 000 b) 530 c) 531 d) 531 000

2. Write 2.35×10^{-5} as a basic numeral

a) 0.0000235 b) 0.00000235 c) 235 000 d) 23 500 000

3. The answer to $\sqrt{8} \times \sqrt{6}$ is exactly

a) 6.9 b) 6.92820323 c) $4\sqrt{3}$ d) $\sqrt{12}$

4. When simplified $\left(5^4\right)^{-6}$ is

a) $\frac{1}{5^{24}}$ b) $\frac{1}{5^{10}}$ c) $\frac{1}{5^2}$ d) $\frac{1}{5^{46}}$

5. The value of x when $4x^2 = 36$ is:

a) $x = \pm 3$ b) $x = 6$ c) $x = 3$ d) $x = \pm 6$

6. The perimeter of the following composite figure is:

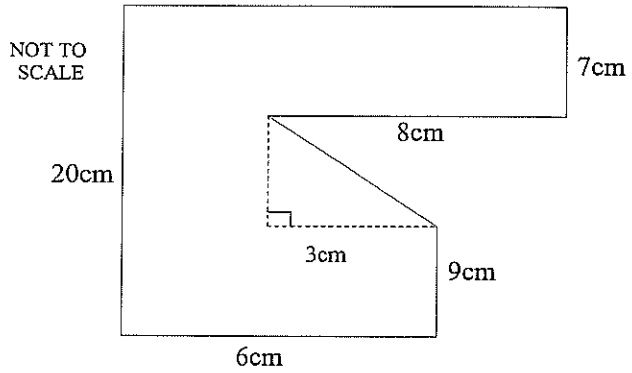

a) 59 cm

b) 53 cm

c) 66 cm

d) 61 cm

7. The shaded area of the following figure is approximately:

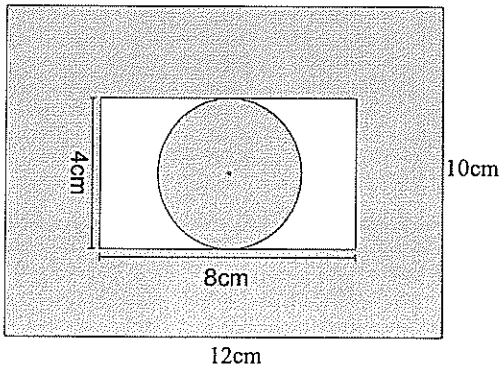

a) $88cm^2$

b) $101cm^2$

c) $138cm^2$

d) $133cm^2$

8. The perimeter of the following figure of congruent equilateral triangles with one side that is equal to x is:

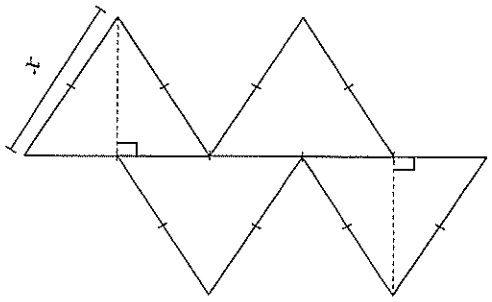

a) $9x$

b) $12x$

c) $8x$

d) $\frac{17}{2}x$

---

9. Make h the subject of the following $V = \frac{Ah}{3}$

a) $h = \frac{3A}{V}$ b) $h = \frac{AV}{3}$ c) $h = \frac{3V}{A}$ d) $h = \frac{V-3}{A}$

---

10. If $m = 2$ find the value of n if $n = 4m^2\left(m^3 + 2m^5\right)$

a) 192 b) 1 152 c) 8 448 d) 640

---

11. A one litre carton of milk has a square base of size 7 cm by 7 cm and vertical sides. The depth of the milk, in centimetres, is closest to:

a) 18 b) 20 c) 22 d) 24

---

12. If $2x + 3 \geq 4x + 9$:

a) $x > -3$ b) $x \leq 3$ c) $x \geq 3$ d) $x \leq -3$

---

13. The solution to the equation $2y = \frac{8y-9}{5}$ is

a) $y = -3.5$ b) $y = 3.5$ c) $y = -4.5$ d) $y = 4.5$

---

14. Given that $\angle PQR = \angle LMN$ and PQ = LM and QR = MN. What is the test needed to prove that the two triangles are congruent (as an abbreviation)?

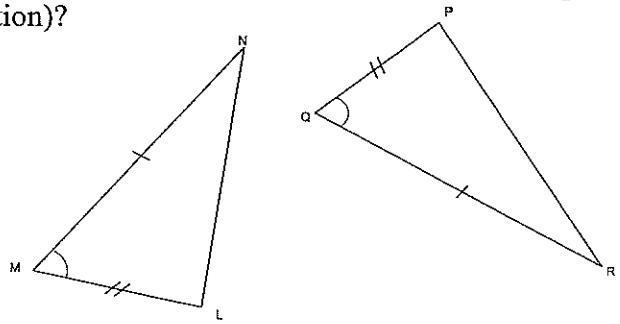

a) *Angle, Angle, Side*

b) *Angle, Side, Angle*

c) *Side, Side, Side*

d) *Side, Angle, Side*

USE THE FOLLOWING GRAPH FOR QUESTIONS **15** TO **17**

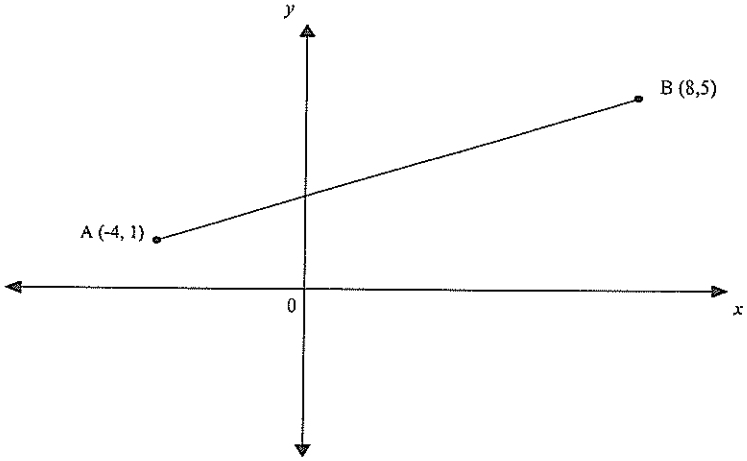

15. The midpoint of the interval AB is:

a) (2,3) b) (6, 2) c) (3,2) d) (2,6)

16. The distance of the interval AB is approximately:

a) 12 b) 6.3 c) 3.6 d) 12.6

17. The gradient of the line AB is:

a) 3 b) -3 c) $\frac{1}{3}$ d) $-\frac{1}{3}$

18. Simplify the expression: $2(2a + 5) - 2(3a - 6)$

a) $-2a + 22$ b) $10a - 22$ c) $-2a + 11$ d) $10a - 2$

19. If $x^2 = a^2$ then

a) $x = \sqrt{a}$ b) $x = \pm a$ c) $x = a$ d) $x = -a$

20. The figure shows three congruent sectors of a circle in a hexagon. What is the area of the shaded part?

a) $3\ \pi R^2$

b) πR^2

c) $\frac{9}{10}\ \pi R^2$

d) $\frac{4}{5}\ \pi R^2$

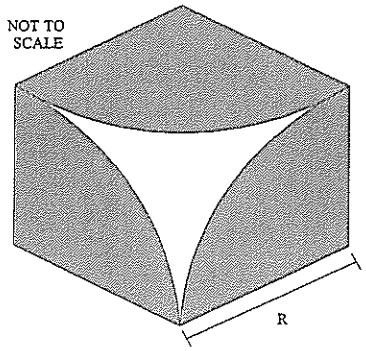

21. The statement "a third of five less than the square root of a number k is ten more than the product of five and the number" may be represented as:

a) $\sqrt{k} - \frac{5}{3} = 5k + 10$ b) $\frac{\sqrt{k} - 5}{3} = 5k + 10$ c) $\frac{\sqrt{k}}{3} - 5 = 5(k + 10)$ d) $\frac{\sqrt{k}}{3} - 5 = 5k + 10$

---

22. Without drawing any further lines on the diagram, four students found the values of x and y, giving reasons. Only one student gave the correct reasons.
Which reasons are correct?

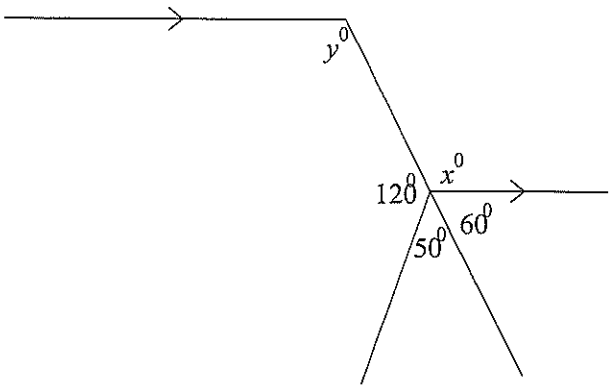

a) $x =$_____(vertically opposite angles)
$y =$_____(cointerior angles, parallel lines)

b) $x =$_____(angle sum at a point is 360^0)
$y =$_____(cointerior angles, parallel lines)

c) $x =$_____(vertically opposite angles)
$y =$_____(alternate angles, parallel lines)

d) $x =$_____(angle sum at a point is 360^0)
$y =$_____(alternate angles, parallel lines)

---

23. A double decker bus had 90 people on board. If the top deck had 25% more people than on the bottom deck, how many people were on the top deck?

a) 40 b) 50 c) 60 d) 70

---

24. The Venn diagram at right shows whether the students in the class 10S liked History or Maths. Some liked both subjects and some liked neither. A student is chosen at random from the class 10S?

What is the probability that the student likes Maths?

a) $\frac{5}{14}$

b) $\frac{7}{15}$

c) $\frac{14}{27}$

d) $\frac{19}{30}$

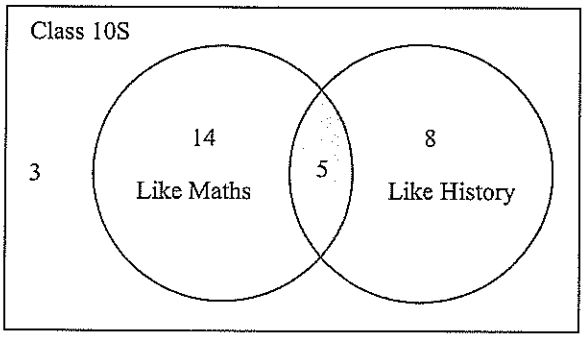

---

25. $(5y - 6)(5y + 6) = ?$

a) $25y^2 + 36$ b) $25y^2 - 36$ c) $25y^2 - 60y - 36$ d) $25y^2 + 60y + 6$

---

26. Which statement is false?

a) $sin45^o = cos45^o$ b) $sin60^o = cos30^o$ c) $sin25^o = cos65^o$ d) $sin50 = cos50^o$

---

27. In a game Mario draws two marbles from a bag containing two red, one white and one blue marble. The tree diagram shows the possible combinations he could draw.

What is the probability that neither marble is red?

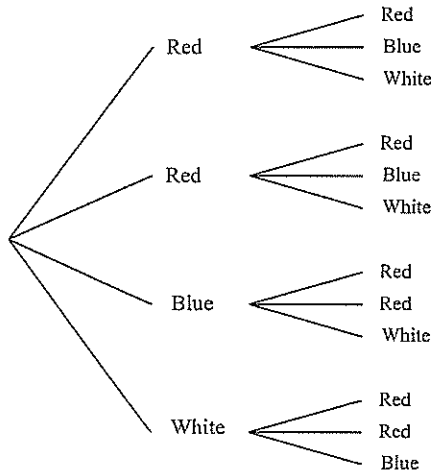

a) $\frac{1}{12}$

b) $\frac{1}{6}$

c) $\frac{1}{4}$

d) $\frac{5}{6}$

---

28. The points P (-2, -8) and Q (1, 1) lie on the line ℓ shown.
The equation of the line ℓ, is:

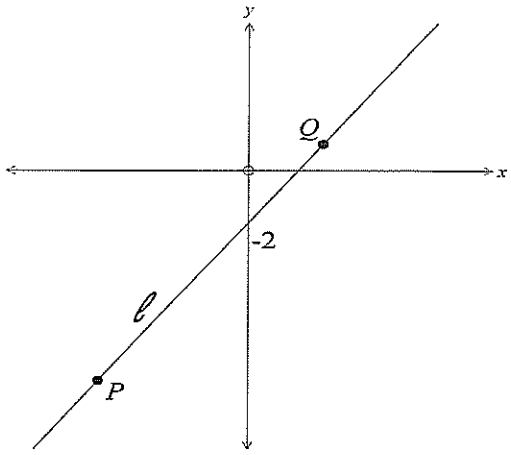

a) $y = 3x - 2$

b) $y = -3x - 2$

c) $y = 2x - 3$

d) $y = -2x - 3$

---

29. $(2m^4k^{-2})^8$

a) $16m^{12}k^6$ b) $16m^{32}k^{-16}$ c) $256m^{12}k^6$ d) $256m^{32}k^{-16}$

---

30. $\frac{1}{\sqrt{a^3}}$ can be written as:

a) $a^{-\frac{3}{2}}$ b) $a^{-\frac{2}{3}}$ c) $a^{-\frac{1}{2}}$ d) $a^{-\frac{1}{3}}$

---

31. Which statement is NOT true about the line whose equation is $x - 3y + 6 = 0$.

a) It has a gradient of $\frac{1}{3}$.

b) It crosses the y axis at $y = -2$.

c) It passes through the point (3, 3)

d) It's equation can also be written as $y = \frac{x}{3} + 2$.

---

32. The triangle PQR has angle P = 61° and angle Q = 58°.

Sarah makes the following statements about the sides of the triangle:

I. PQ = PR

II. QR < PQ

She is correct in

a) I only b) II only c) both I and II) d) neither I nor II

---

33. The triangle ABC is isosceles with AB = AC.
If the area of ΔABC is 72 square units,
at what point does A lie on the Y axis?

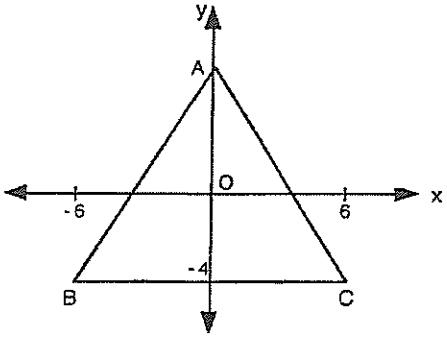

a) (0,6)

b) (0,3)

c) (0,4)

d) (0,8)

---

34. The shaded design is made from four of the small triangles.
What is the perimeter of the design?

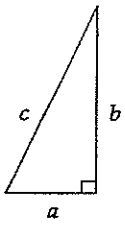

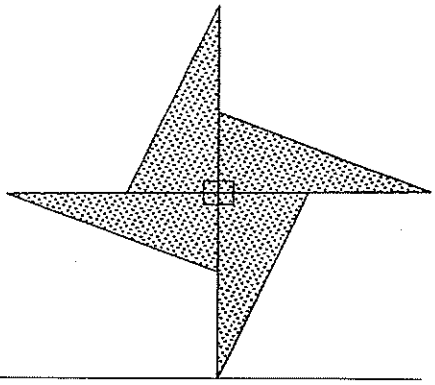

a) $4c+4b+4a$

b) $4c+4b-4a$

c) $4a-4b+4c$

d) $4a^2+4b^2+4c^2$

---

35. What is the value of t ?

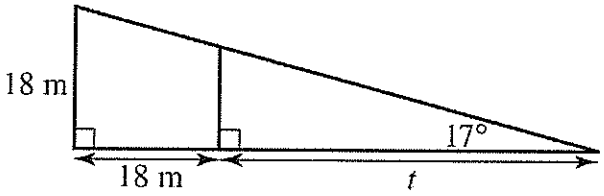

a) 55.03 m b) 50.83 m c) 40.88 m d) 58.88

END OF PART B

PART A –

Write your answer in the appropriate space

NAME: Solutions

1. $\frac{11x}{2}$	14. 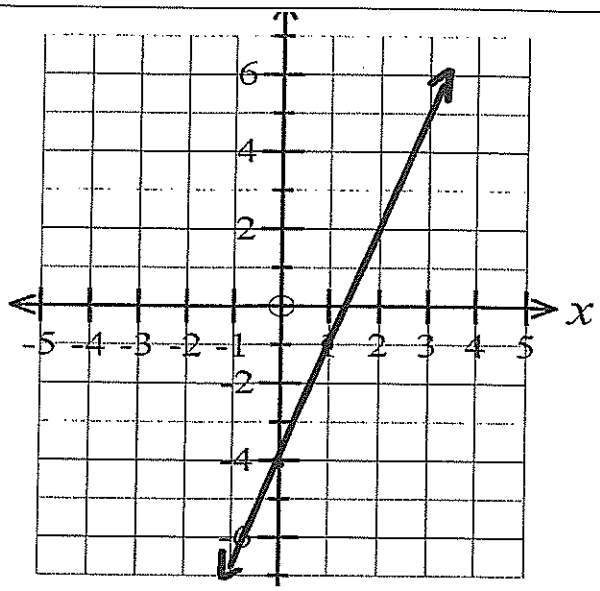
2. $11 \times 9 + 81 = 180$	
3. $\frac{22}{15}$	15. $2x^9$
4. 7.85×10^7	16. $m = -2$
5. $0.77x$	17. $-\frac{14}{88}$
6. $0.\dot{4}\dot{5}$	18. $\sqrt{3}$
7. 100	19. 100 metres
8. $2b - a$	20. $\frac{3}{4}$
9. $x = -\frac{1}{2}$	21. 6:32 pm
10. 40	22. $4.5m^2$
11. $B = 7B - 2$	23. $840cm^2$
12. $8a^2 - 5ab$	24. 81
13. $x = 10$	25. 13^0

TOTAL: _____ /25

ANSWER SHEET

Name: Solutions

Class: _____

If you make a mistake cross out and redo

If you change your mind again, label the one you want "this one"

Q1	(A)	(B)	(C)	(D) ●
Q2	(A) ●	(B)	(C)	(D)
Q3	(A)	(B)	(C)	(D) ●
Q4	(A) ●	(B)	(C)	(D)
Q5	(A) ●	(B)	(C)	(D)
Q6	(A)	(B)	(C)	(D) ●
Q7	(A)	(B) ●	(C)	(D)
Q8	(A) ●	(B)	(C)	(D)
Q9	(A)	(B)	(C)	(D) ●
Q10	(A)	(B) ●	(C)	(D)
Q11	(A)	(B) ●	(C)	(D)
Q12	(A)	(B)	(C)	(D) ●
Q13	(A)	(B)	(C) ●	(D)
Q14	(A)	(B)	(C)	(D) ●
Q15	(A) ●	(B)	(C)	(D)
Q16	(A)	(B)	(C)	(D) ●
Q17	(A)	(B)	(C) ●	(D)
Q18	(A) ●	(B)	(C)	(D)
Q19	(A)	(B) ●	(C)	(D)
Q20	(A)	(B) ●	(C)	(D)
Q21	(A)	(B)	(C) ●	(D)
Q22	(A)	(B)	(C)	(D) ●
Q23	(A)	(B) ●	(C)	(D)
Q24	(A)	(B)	(C)	(D) ●
Q25	(A)	(B) ●	(C)	(D)
Q26	(A)	(B)	(C)	(D) ●
Q27	(A)	(B) ●	(C)	(D)
Q28	(A) ●	(B)	(C)	(D)
Q29	(A)	(B)	(C)	(D) ●
Q30	(A) ●	(B)	(C)	(D)
Q31	(A)	(B) ●	(C)	(D)
Q32	(A)	(B)	(C)	(D) ●
Q33	(A)	(B)	(C)	(D) ●
Q34	(A)	(B) ●	(C)	(D)
Q35	(A)	(B)	(C) ●	(D)

ANSWER SHEET

Name: _____ Class: _____

If you make a mistake cross out and redo

If you change your mind again, label the one you want "this one"

Q1	(A)	⬭	(B)	⬭	(C)	⬭	(D)	⬭	Q21	(A)	⬭	(B)	⬭	(C)	⬭	(D)	⬭
Q2	(A)	⬭	(B)	⬭	(C)	⬭	(D)	⬭	Q22	(A)	⬭	(B)	⬭	(C)	⬭	(D)	⬭
Q3	(A)	⬭	(B)	⬭	(C)	⬭	(D)	⬭	Q23	(A)	⬭	(B)	⬭	(C)	⬭	(D)	⬭
Q4	(A)	⬭	(B)	⬭	(C)	⬭	(D)	⬭	Q24	(A)	⬭	(B)	⬭	(C)	⬭	(D)	⬭
Q5	(A)	⬭	(B)	⬭	(C)	⬭	(D)	⬭	Q25	(A)	⬭	(B)	⬭	(C)	⬭	(D)	⬭
Q6	(A)	⬭	(B)	⬭	(C)	⬭	(D)	⬭	Q26	(A)	⬭	(B)	⬭	(C)	⬭	(D)	⬭
Q7	(A)	⬭	(B)	⬭	(C)	⬭	(D)	⬭	Q27	(A)	⬭	(B)	⬭	(C)	⬭	(D)	⬭
Q8	(A)	⬭	(B)	⬭	(C)	⬭	(D)	⬭	Q28	(A)	⬭	(B)	⬭	(C)	⬭	(D)	⬭
Q9	(A)	⬭	(B)	⬭	(C)	⬭	(D)	⬭	Q29	(A)	⬭	(B)	⬭	(C)	⬭	(D)	⬭
Q10	(A)	⬭	(B)	⬭	(C)	⬭	(D)	⬭	Q30	(A)	⬭	(B)	⬭	(C)	⬭	(D)	⬭
Q11	(A)	⬭	(B)	⬭	(C)	⬭	(D)	⬭	Q31	(A)	⬭	(B)	⬭	(C)	⬭	(D)	⬭
Q12	(A)	⬭	(B)	⬭	(C)	⬭	(D)	⬭	Q32	(A)	⬭	(B)	⬭	(C)	⬭	(D)	⬭
Q13	(A)	⬭	(B)	⬭	(C)	⬭	(D)	⬭	Q33	(A)	⬭	(B)	⬭	(C)	⬭	(D)	⬭
Q14	(A)	⬭	(B)	⬭	(C)	⬭	(D)	⬭	Q34	(A)	⬭	(B)	⬭	(C)	⬭	(D)	⬭
Q15	(A)	⬭	(B)	⬭	(C)	⬭	(D)	⬭	Q35	(A)	⬭	(B)	⬭	(C)	⬭	(D)	⬭
Q16	(A)	⬭	(B)	⬭	(C)	⬭	(D)	⬭									
Q17	(A)	⬭	(B)	⬭	(C)	⬭	(D)	⬭									
Q18	(A)	⬭	(B)	⬭	(C)	⬭	(D)	⬭									
Q19	(A)	⬭	(B)	⬭	(C)	⬭	(D)	⬭									
Q20	(A)	⬭	(B)	⬭	(C)	⬭	(D)	⬭									